System Modeling

- General principles of modeling
- Descriptive models
- Analytical models
- Prototypes and Proofs of Concept
- Prototyping Exercise

Model Hierarchy/Succession

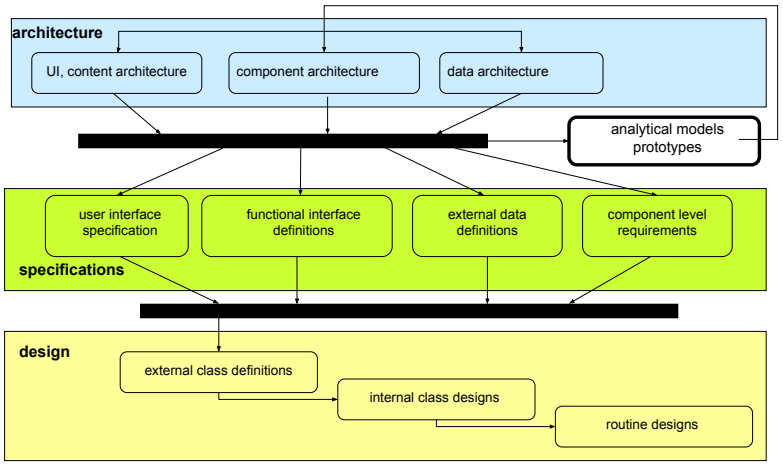

General Types of Models

- Descriptive models
  - built to facilitate communication
    - help users understand what will be built
    - help developers understand what to build
- Analytical Models
  - built to answer questions or reduce doubt
    - clarification and validation of requirements
    - questions about a proposed implementation
- Mock-ups and “Proof-of-Concept”s
  - built to sell an idea
    - convince someone that the idea will work

Models

- are smaller and simpler than the real thing
  - making them less expensive to build
  - making them more portable
  - making them easier to understand
- often model only subsets of whole system
  - stripping away layers complicating details
  - permitting system to be understood in parts
- may expose otherwise invisible processes
  - making those processes easier to understand
- are only <u>approximations</u> of reality
  - they may lead to inaccurate notions/predictions

Agile Modeling Principles

- Model with a purpose
  - be clear why you are building each model
- Travel light
  - maintain as few models as possible
  - know which (few) models are keepers
- Use multiple models
  - don’t try to make one model serve all needs
- Content is more important than format
  - best form is the one that achieves your goals

System Views

- Complex systems are hard to comprehend
  - more information than the mind can hold
- We have to decompose them
  - into hierarchies of systems and subsystems
    PC = { case, power supply, motherboard, devices}
    motherboard = { processor, bus, memory, support chips }
    bus = { addressing, data transport, arbitration }
  - into relatively independent systems
    skeletal, muscular, circulatory, neural, digestive …
  - into components on orthogonal axes
    pragmatic, moral, legal, aesthetic, political, …
- A system modeling language must be able to
  - describe hierarchies of models
  - describe different types (and aspects) of models

Design Model Based Tools

- Design Visualization Tools
  - browse through hierarchies of models
  - selecting views
  - filtering displayed contents
- Design Validation Tools
  - style & standards conformance checkers
  - consistency checkers
  - interface based test case generators

Simple Mathematical Models (just do it)

- Algebraic Models
  - make up equations to describe situations
  - don't be afraid to estimate parameter values
    - use ranges and independent estimates
- Probabilistic Models
  - estimate event likelihood, frequencies
  - outcome expectancies (*cost x probability*)
- Combinatoric Models
  - how many possible combinations are there

Markov Availability Models

- Mathematical models of state transitions

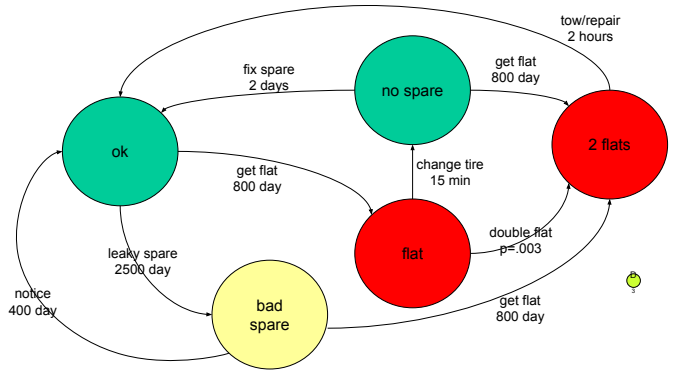

(Markov Models)
(there are nice tools for these)

- Given:
  a state machine representation of a system
  w/mean transition rates (and/or probabilities)
- Assuming:
  all events follow *standard* distribution
  <u>transitions have no memory of past events</u>
- Model will yield numeric solutions for:
  % of time system will spend in each state
  mean visit duration for each state

<u>Prototype to reduce Risk</u>

- User Interface Prototypes
  - do we have the U/I requirements right?
  - will the users find it to be usable?
- Mechanism or Process Prototypes
  - do we know how to build/do this?
  - how well will it work?
- Tool and Platform Evaluation
  - how much trouble will this new stuff cause?
- <u>Be clear on what risk you are addressing</u>

Keep your prototypes lean

- minimum possible implementation
  - simplest model that answers the question
  - fake everything you possibly can
- don't fall in love with it
  - plan on throwing it away when you're done
  - don't yield to the temptation to polish it
- But don't be afraid to make mistakes
  - prototypes are the place to take chances
  - but don't hesitate to abandon bad ideas

Proof of Concept

- You need support from others to succeed
  - managers, investors, customers
- They may be afraid to help you
  - if you fail, they will suffer losses too
  - they may doubt your ability to succeed
    - the proposed product might not be compelling
    - you might not be able to deliver it on schedule
    - there may be unsolvable technical problems
  - these doubts must be assuaged
- well designed proof-of-concept can do it

Exercise – in your teams

- consider user facing interfaces (5-7 min)
  - where understanding/usability might be an issue?
  - how would you mock-up what?
  - who would you ask to do what with it?
- consider tools and mechanisms (5-7 min)
  - what might be hard to master, or might not work?
  - what things do you need to be sure of?
  - what is the simplest project to get the answers?
- be prepared to discuss what you discover

For the next lecture

- McConnell 3.5-3.6, 5.2
  - "goodness" in architecture and design
- Foote: Big Ball of Mud (digest)
  - the forces of anti-architecture
- SEI: Definition of Architecture
- Garlan: S/W Architecture
  - Elements of S/W Architecture
- Wikipedia: Mechanism/Policy Separation
- Kampe: Interface Stability
- Kampe: Software Testability

Supplementary Slides

Queuing Models*

- Mathematical models of traffic and servers

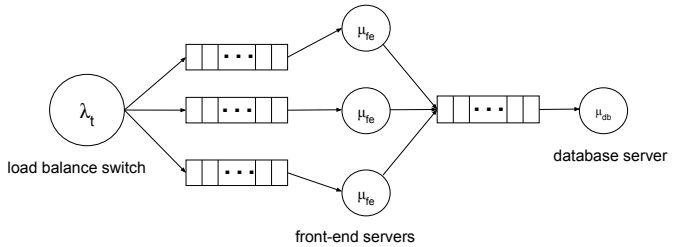

(Queuing Models)
(don't try these at home)

- Given:
  a system of input queues and servers
  request arrival and processing rates
- Assuming:
  arrivals have a *standard* distribution
  processing time is same for all events in queue
- Model will yield closed-form solutions for:
  queue length (distribution function)
  waiting time (distribution function)

Discrete Event Simulations

- simulate dynamic system behavior
  - for systems other techniques can't model
    - e.g. future events depend on past details
  - for questions other techniques can't answer
    - e.g. "Why are there so many cache misses?"
  - to exercise scheduling/routing algorithms
    - run simulated traffic through a real algorithm
- there are <u>very</u> abstract models
  - may be written in special simulation language
  - code may be very different from real system

Automatic Code Generation

- class model compilers
  - generate module skeletons
  - declarations for classes, methods, properties
  - stubbed routines to permit basic build/test
- rough code generators
  - simple code from activity diagrams
  - calls from interaction diagrams
- state language compilers
  - generate final code from state machines

UML General Conventions

- Squares represent logical things
  - classes, objects, packages, components
  - box ornaments determine the type of thing
  - name of thing appears at top, inside the square
- Arrows represent relationships
  - communication solid, dependency dashed
  - arrow heads determine type and direction
  - relationships (and end connectors) can be named
- Circles represent interfaces
  - they can be named
- 3D boxes represent physical containers
- UML diagrams can be nested and composed

Component Models*

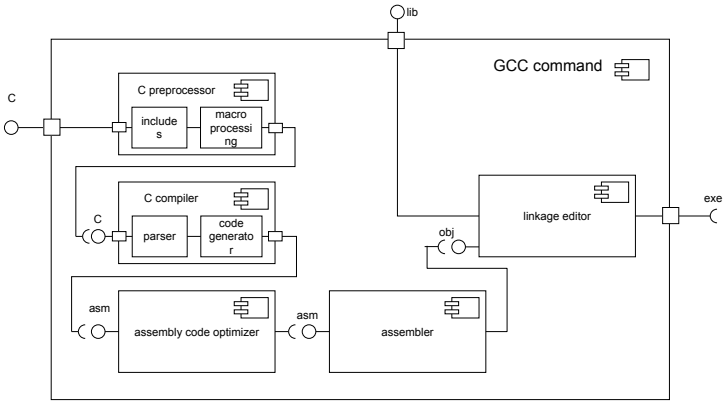

(UML Component Models)

- Most UML models are detail oriented
  - class, activity & interaction diagrams
- Component models take a black box view
  - system is composed of multiple black boxes
  - they are interconnected with one-another
  - some connectors support standard interfaces
- Component models focus entirely on
  - the independent components
  - their interconnections and interfaces
- Well suited for high level architecture

Component Deployment Models*

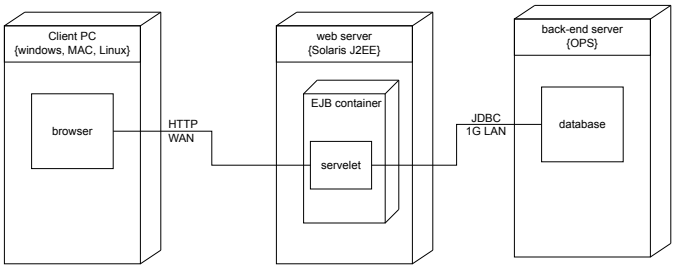

(Component Deployment Models)

- Most UML structural models are logical
  - classes and software components
- We must also model physical systems
  - hardware components
  - physical interconnections between them
- And the deployment of logical functionality
  - which software runs on which hardware
    - distributed and client/server applications
  - which software runs in which container
    - application servers, virtual machines, etc.

Digital TV Data Flow Model*

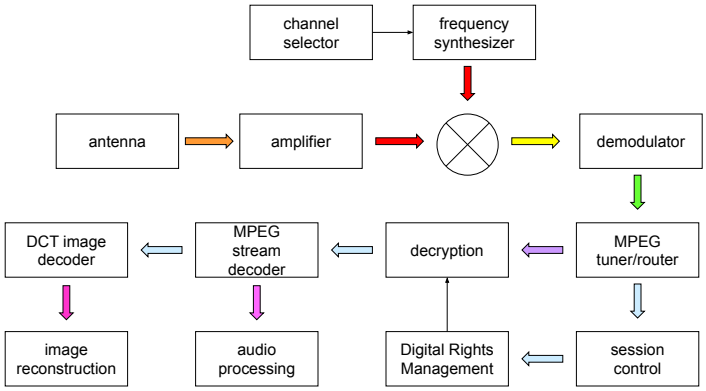

(Data Flow Models)

- UML is designed for OO-software
  - components are comprised of related objects
  - objects have properties and methods
  - methods have associated algorithms
  - interactions are via discrete messages
- Data Flow Models take different view
  - follow input, through processing, to output
  - all components are processing in parallel
  - processing is continuous rather than discrete
  - view system in terms of data transformations